June 1, 2009
Lit. No. 56835, Rev. 00

HEADLAMP KIT H13

PARTS LIST

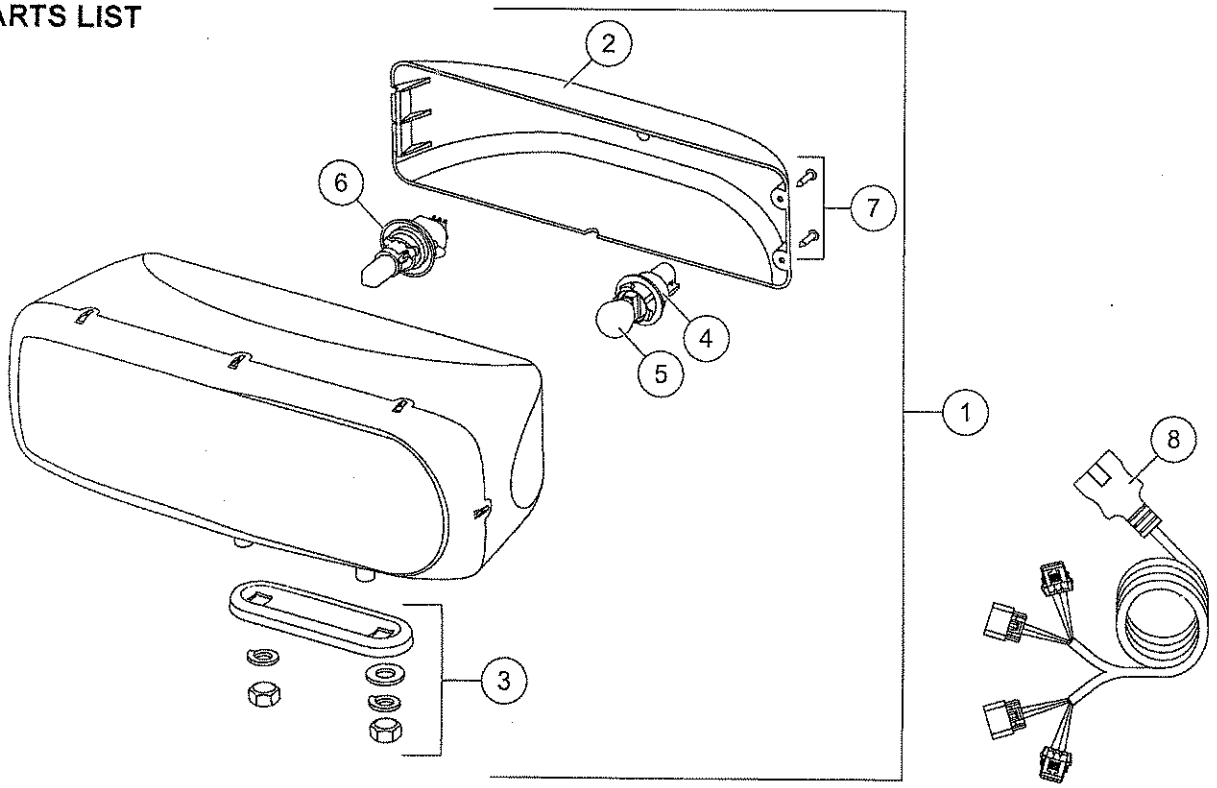

28800-1 Headlamp Kit (Pair)							
Item	Part	Qty	Description	Item	Part	Qty	Description
1	28801-1	1	Headlamp Service Kit DS	5		2	Park/Turn Bulb (Trade No. 4157NAK)
ns	28802-1	1	Headlamp Service Kit PS	6	28806	2	H13 Headlamp Bulb Service Kit
2	28803-1	2	Rear Cover Kit (fits 2 or 3 screw)	7	28808-1	2	Cover Screws Service Kit (3 screws)
3	28804	2	Mounting Hardware Kit	8	28213	1	Harness Service Kit
4	28805	2	Park/Turn Socket Service Kit				
ns = not shown							

⚠ CAUTION

Read this document before installing the headlamp kit.

⚠ CAUTION

Use standard methods and practices when attaching snowplow and installing accessories including proper personal protective safety equipment.

NOTE: If the headlamp attachment point has only 1 hole per side, you will need to see your sales outlet before installing these headlamps.

NOTE: To install these headlamps on a snowplow equipped with a relay electrical system and old-style headlamps, you will need a 29033 electrical adapter kit.

NOTE: To install these headlamps on a snowplow equipped with an Isolation Module electrical system and old-style headlamps, you can either use the 29033 electrical adapter kit with the existing headlamp harness or replace the existing headlamp harness with the 28213 harness packed in the 28800-1 headlamp kit.

HEADLAMP INSTALLATION

1. If applicable, remove the old headlamps from the snowplow. Install headlamp extension bracket kit or modify headlamp attachment point as recommended for that model of snowplow.

NOTE: If reusing the existing headlamp harness, disconnect the harness from the old headlamps before removing them and leave the harness installed on the snowplow. If using a new 28213 harness, completely disconnect and remove the old headlamp harness from the snowplow when removing the headlamps.

2. Slide a headlamp mounting cup onto the headlamp with the curved side of the swivel against the headlamp.

3. Insert the two headlamp posts into the two holes in the snowplow's headlamp attachment point. Make sure to install the headlamp with the turn signal toward the outside.

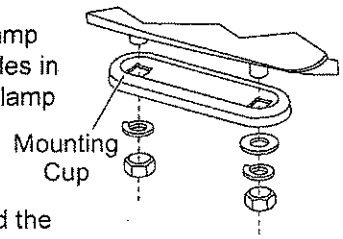

4. Slide a flat washer onto the headlamp post inserted through the slotted hole, then install a lock washer and nut onto each headlamp post and hand tighten.

HARNESS INSTALLATION

1. If using the 29033 adapter kit, install the adapters per the supplied instructions.

2. Plug the headlamp harness into the back of the headlamp. The short leg of the harness is plugged into the driver-side light and the long leg is plugged into the passenger-side light.

3. Install a cable tie to securely hold the braided portion of the harness against the headlamp. Route the wires where they will not chafe on the steel bracket.

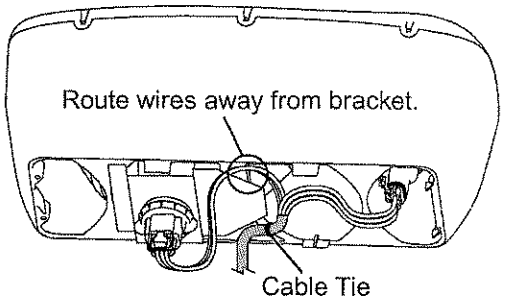

4. Install the rear headlamp cover, tightening the screws until they are snug against the cover.

5. If not already installed on the snowplow, route headlamp harness as instructed in your snowplow installation instructions.

6. Follow the headlamp beam aiming instructions (lit. no. 27769), then tighten headlamp fasteners to 50 ft-lb.

Copyright © 2009 Douglas Dynamics, L.L.C. All rights reserved. This material may not be reproduced or copied, in whole or in part, in any printed, mechanical, electronic, film or other distribution and storage media, without the written consent of the company. Authorization to photocopy items for internal or personal use by the company's outlets or snowplow owner is granted.

The company reserves the right under its product improvement policy to change construction or design details and furnish equipment when so altered without reference to illustrations or specifications used. This equipment manufacturer or the vehicle manufacturer may require or recommend optional equipment for snow removal. Do not exceed vehicle ratings with a snowplow. The company offers a limited warranty for all snowplows and accessories. See separately printed page for this important information.

Printed in U.S.A.

Snowplow Headlamp Beam Aiming

Torque headlamp fasteners to 45 ft-lb once correct visual aim is achieved.

1. Place vehicle on a level surface 25 feet in front of a matte-white screen, such as a garage door. The screen should be perpendicular both to the ground and to the vehicle centerline.

2. The vehicle should be equipped for normal operation. The snowplow blade should be in place and in raised position. Below are steps listed by the Society of Automotive Engineers (SAE) pertinent to headlamp aiming in specification #SAE J599d.

3. Prepare vehicle for headlamp aim or inspection. Before checking beam aim, the inspector will:

   a. Remove ice or mud from under fenders.
   b. Set tire inflation pressures to the values specified on vehicle information label.
   c. Check springs for sag or broken leaves.
   d. See that there is no load in the vehicle other than the driver and ballast as specified in the Kit Selection Guide/Selection List.
   e. Check functioning of any automatic vehicle leveling systems and specific manufacturer's instructions pertaining to vehicle preparation for headlamp aiming.
   f. Clean lenses. Remove "Notice to Installer" label from snowplow headlamp sealed beams.
   g. Check for bulb burnout and proper beam switching.
   h. Stabilize suspension by rocking vehicle sideways.

4. Mark (or tape) the vertical centerline of the snowplow headlamps and the vertical centerline of the vehicle on the screen. Mark the horizontal centerline of the snowplow headlamps on the screen (distance from ground to snowplow headlamp centers).

5. Align the top edge of the high intensity zone of the snowplow lower beam below the horizontal centerline and the left edge of the high intensity zone on the vertical centerline for each snowplow headlamp. (Refer to diagram below.)

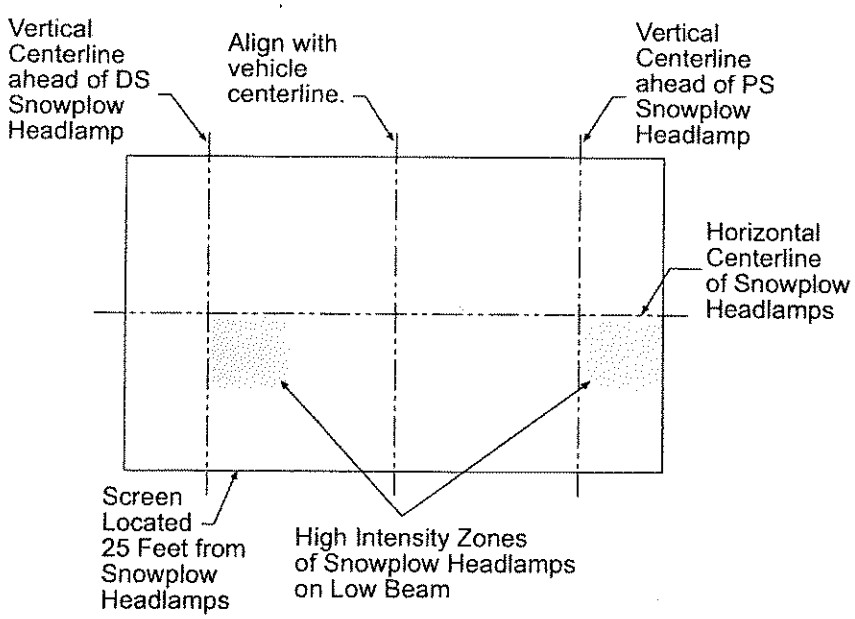

The company reserves the right under its product improvement policy to change construction or design details and furnish equipment when so altered without reference to illustrations or specifications used. Do not exceed vehicle ratings with a snowplow. The company offers a limited warranty for all snowplows. See separately printed page for this important information.

Lit. No. 27769 Printed in U.S.A. May 10, 2004

A DIVISION OF DOUGLAS DYNAMICS, L.L.C.